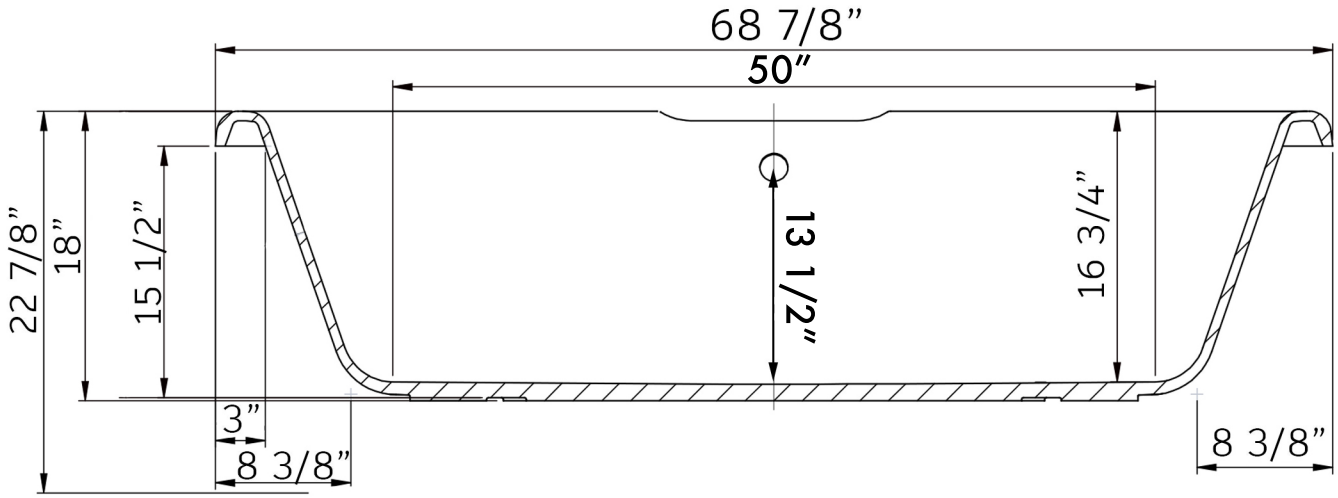

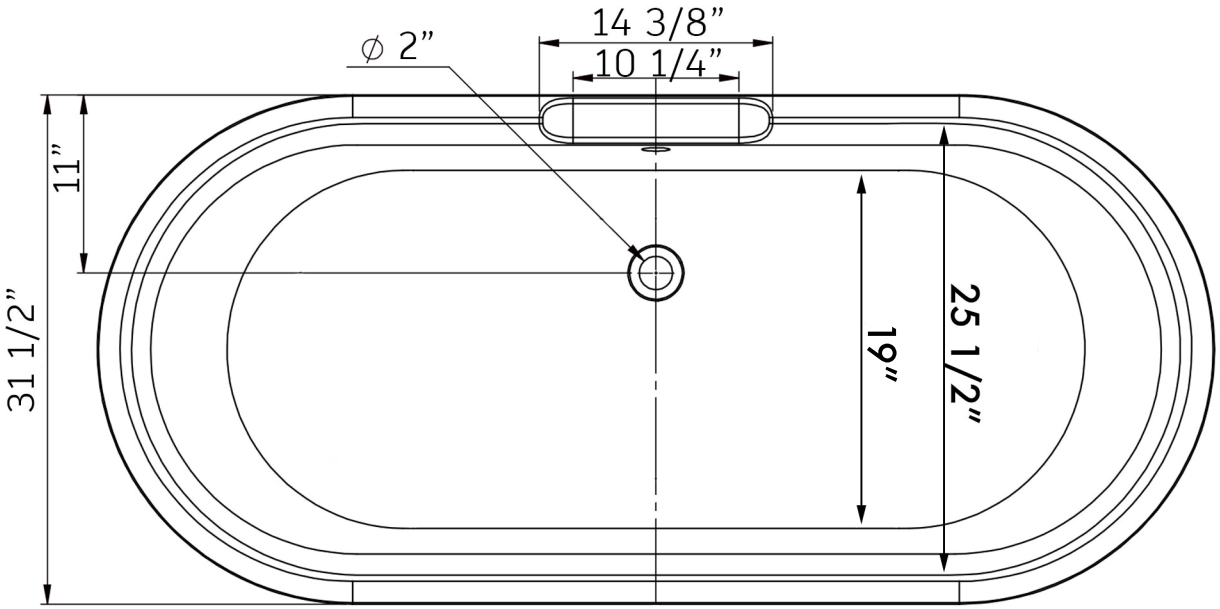

Revision - 2 7/8/2020
Edit - C